PIE DATASHEET

FLOOR LAMP

LED | 230V/50Hz | IP40



STANDARDS: EN 60598-1, EN 60598-2-1

TECHNICAL DRAWING

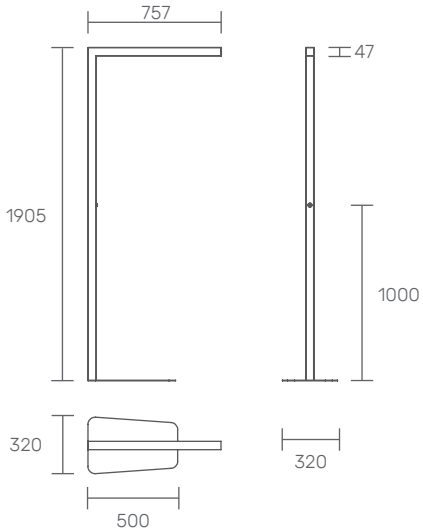

PRODUCT DESCRIPTION

LED floor lamp with adjustable knob.
Injected aluminum body, thermo-lacquered.

LIGHT SOURCE

Driver LED, 220-240VAC-50/60Hz.
CRI>80, 100.000h of useful life.
@L90, B10, Ta 25°.

AVAILABLE COLOR/FINISH

1-white/ 2-black/ 4-anthracite/ 8-RAL

AVAILABLE LIGHT TEMPERATURE/ COLOR

2700K/3000K/4000K/6500K

AVAILABLE DIFFUSER

O -opaline / N -black / P -microprismatic/
L - lens

AVAILABLE DRIVER

1- HF - ON/OFF
2 - DALI - Flow regulation

PIE

POWER (W)	FLOW (lm)	CODE
20	3500	PIE.020.LK.AED

Possibility of custom lines - On request

KATOA
Everything is Lighting

Rua Dr. Manuel Ramos, 285 - Pavilhão E
4415-456 Grijó - Vila Nova de Gaia
Portugal

+351 221 110 602
ola@katoa.lighting
https://katoa.lighting/