NIVA DATASHEET

SUSPENDED APPLICATION

COB LED | 230V/50Hz | IP40



STANDARDS: EN 60598-1, EN 60598-2-1

TECHNICAL DRAWING

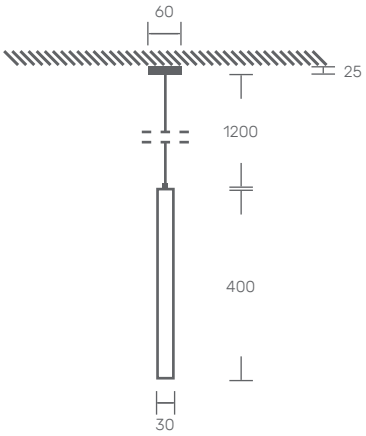

PRODUCT DESCRIPTION

Luminaire for suspended application.
Lacquered aluminum body.

LIGHT SOURCE

LED 5W
Driver LED, 20-240VAC - 50/60Hz.
CRI>90.

AVAILABLE COLOR/FINISH

2-black

AVAILABLE LIGHT TEMPERATURE/ COLOR

2700K/ 3000K/ 4000K

AVAILABLE DIFFUSER

T - transparent

DRIVER DISPONÍVEL

1- HF - ON/OFF
2- DALI - Flow regulation
3- 1-10V - Flow regulation

AVAILABLE CABLECUP



SU - Ceiling surface (standard)
E - Recessed ceiling application

NIVA

POWER (W)	FLOW (lm)	CODE
5	420	NIVA.005.2K.2ET

KATOA
Everything is Lighting

Rua Dr. Manuel Ramos, 285 - Pavilhão E
4415-456 Grijó - Vila Nova de Gaia
Portugal

+351 221 110 602
ola@katoa.lighting
https://katoa.lighting/