DOL Q T DATASHEET

RECESSED APPLICATION

LED | 230V/50Hz | IP43

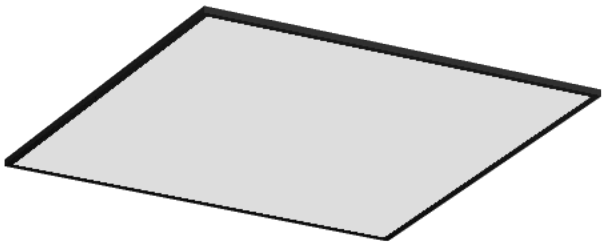

STANDARTS: EN 60598-1, EN 60598-2-1

PxL

TECHNICAL DRAWING

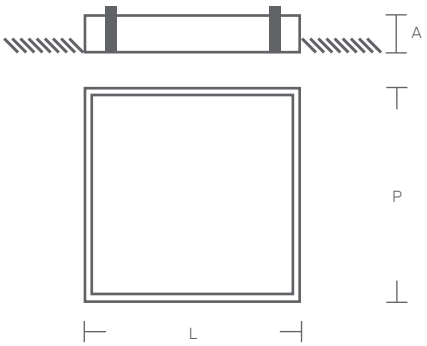

PRODUCT DESCRIPTION

Square LED luminaire for recessed application, trimless.
Extruded aluminum body coated with epoxy polyester.
Opal polycarbonate diffuser.

LIGHT SOURCE

Driver LED, 220-240VAC-50/60Hz.
CRI>80, 65.000h of useful life.
@L80, B10, Ta 25°C

AVAILABLE COLOR/FINISH



1-white/ 2-black/ 4-anthracite/ 6- grey/ 8-RAL

AVAILABLE LIGHT TEMPERATURE/ COLOR



2700K/ 3000K/ 4000K/ 6500K/ TW

AVAILABLE DIFFUSER



O -opaline

AVAILABLE DRIVER

1- HF - ON/OFF
2- DALI - Flow regulation
4- W - Bluetooth / Wifi

DOL Q T

DIMENSIONS (mm)	POWER (W)	FLOW (lm)	CODE
220x220x80	16	2800	DOL22QT.016.LK.AED
320x320x80	8	1450	DOL32QT.008.LK.AED
320x320x80	18	2900	DOL32QT.018.LK.AED

KATOA
Everything is Lighting

Rua Dr. Manuel Ramos, 285 - Pavilhão E
4415-456 Grijó - Vila Nova de Gaia
Portugal

+351 221 110 602
ola@katoa.lighting
https://katoa.lighting/