SKY V OUT

DATASHEET

SUSPENDED APPLICATION

LED | 24V | IP40



STANDARDS: EN 60598-1, EN 60598-2-1

PRODUCT DESCRIPTION

Circular LED luminaire for suspended application, external light.
Lacquered aluminum body.
Diffuser in opal silicone.

FONTE DE LUZ

Driver LED, 24V.
CRI>80, 50.000h of useful life.

AVAILABLE COLOR/FINISH

1- white/ 2-black/ 4-anthracite/ 6-grey/ 8- RAL

AVAILABLE LIGHT TEMPERATURE/COLOR

2700K/ 3000K/ 4000K/ 6500K/ TW

AVAILABLE DIFFUSER

0 -opaline

AVAILABLE DRIVER

1- HF - ON/OFF
2- DALI - Flow regulation
4- W - Bluetooth / Wifi

TECHNICAL DRAWING

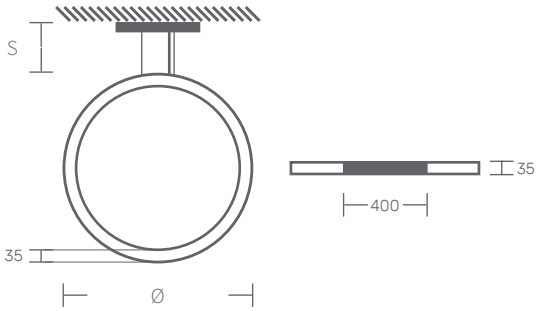

SKY V OUT

DIMENSIONS (mm)	POWER (W)	FLOW (lm)	CODE
Ø625x35x35	29	3290	SKYVO.0620.LK.AED
Ø920x35x35	43	4880	SKYVO.0920.LK.AED
Ø1220x35x35	57	6470	SKYVO.1220.LK.AED
Ø1520x35x35	71	8070	SKYVO.1520.LK.AED

KATOA
Everything is Lighting

Rua Dr. Manuel Ramos, 285 - Pavilhão E
4415-456 Grijó - Vila Nova de Gaia
Portugal

+351 221 110 602
ola@katoa.lighting
https://katoa.lighting/

version 1
112026