SKY V IN DATASHEET

SUSPENDED APPLICATION

LED | 24V | IP40



STANDARDS: EN 60598-1, EN 60598-2-1

TECHNICAL DRAWING

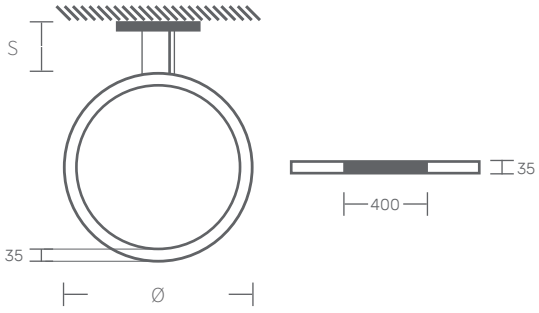

PRODUCT DESCRIPTION

Circular LED luminaire for suspended application, internal light.
Lacquered aluminum body.
Diffuser in opal silicone.

LIGHT SOURCE

Driver LED, 24V.
CRI>80, 50.000h of useful life.

AVAILABLE COLOR/FINISH

1- white/ 2-black/ 4-anthracite/ 6-grey/ 8- RAL

AVAILABLE LIGHT TEMPERATURE/COLOR

TW

2700K/ 3000K/ 4000K/ 6500K/ TW

AVAILABLE DIFFUSER

O -opaline

AVAILABLE DRIVER

1- HF - ON/OFF
2- DALI - Flow regulation
4- W - Bluetooth / Wifi

SKY V IN

DIMENSIONS(mm)	POWER (W)	FLOW (lm)	CODE
Ø625x35x35	29	3290	SKYVI.0620.LK.AED
Ø920x35x35	43	4880	SKYVI.0920.LK.AED
Ø1220x35x35	57	6470	SKYVI.1220.LK.AED
Ø1520x35x35	71	8070	SKYVI.1520.LK.AED

KATOA
Everything is Lighting

Rua Dr. Manuel Ramos, 285 - Pavilhão E
4415-456 Grijó - Vila Nova de Gaia
Portugal

+351 221 110 602
ola@katoa.lighting
https://katoa.lighting/

version 1
112026