SHEL 10 DATASHEET

RECESSED APPLICATION

LED COB | 230V /50Hz | IP44



STANDARDS: EN 60598-1, EN 60598-2-1

75

TECHNICAL DRAWING

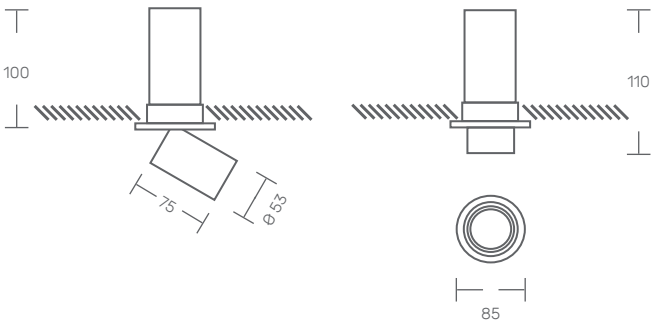

PRODUCT DESCRIPTION

Two-axis adjustable spotlight for recessed installation.
Injected aluminum body, coated with epoxy polyester.
Glossy aluminum reflector.

LIGHT SOURCE

LED COB, AC220-240V
CRI>90, FP>0.9
50.000h of useful life.

AVAILABLE COLOR/FINISH

1-white/ 2-black

AVAILABLE INTERIOR COLOR/FINISH

black

AVAILABLE LIGHT TEMPERATURE/ COLOR

2700K/ 3000K/ 4000K

AVAILABLE DIFFUSER

F - frosted

AVAILABLE DRIVER

1- HF - ON/OFF
2- DALI - Flow regulation
3- 1-10V - Flow regulation

SHEL 10

POWER (W)	FLOW (lm)	CODE
10	910	SHEL.010.LK.AED

KATOA Everything is Lighting

Rua Dr. Manuel Ramos, 285 - Pavilhão E
4415-456 Grijó - Vila Nova de Gaia
Portugal

+351 221 110 602
ola@katoa.lighting
https://katoa.lighting/