DONUT DATASHEET

SUSPENDED APPLICATION

LED | 230V/50Hz | IP40

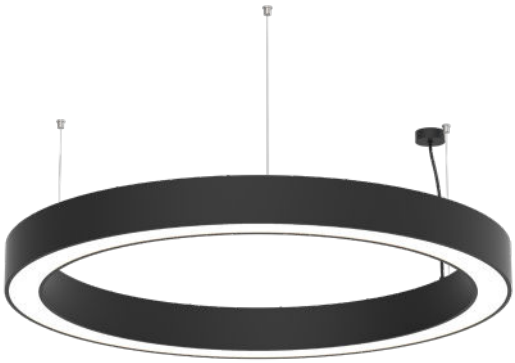

STANDARDS: EN 60598-1, EN 60598-2-1

PRODUCT DESCRIPTION

Circular LED luminaire for suspended application.
Lacquered aluminum body.
Diffuser in opal silicone.

LIGHT SOURCE

Driver LED, 220-240V / 50-60Hz.
CRI>80, 80.000h of useful life.
@L90, B10, Ta 25°.

AVAILABLE COLOR/FINISH

1- white/ 2-black/ 4-anthracite/ 6-grey/
8- RAL

AVAILABLE LIGHT TEMPERATURE/ COLOR

2700K/ 3000K/ 4000K/ 6500K/ TW

AVAILABLE DIFFUSER

O -opaline

AVAILABLE DRIVER

1- HF - ON/OFF
2- DALI - Flow regulation
3- 1-10V - Flow regulation

AVAILABLE CABLECUP



SU - Ceiling surface (standard)
E - Recessed ceiling application
SU 2 - Central ceiling surface with driver box

TECHNICAL DRAWING

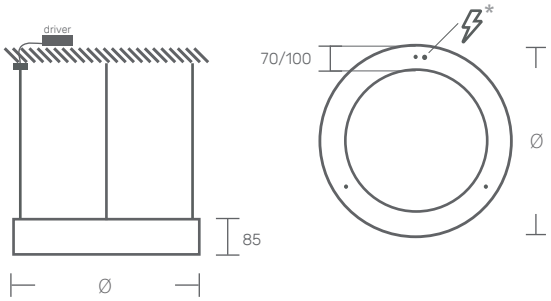

* electrical supply

DONUT

DIMENSIONS (mm)	POWER (W)	FLOW (lm)	CODE
Ø620x70x85	46	8050	D70.0620.LK.AED
Ø930x70x85	76	13300	D70.0930.LK.AED
Ø1200x70x85	100	17500	D70.1200.LK.AED
Ø1520x70x85	128	22400	D70.1520.LK.AED
Ø620x100x85	46	8050	D100.0620.LK.AED
Ø930x100x85	76	13300	D100.0930.LK.AED
Ø1200x100x85	100	17500	D100.1200.LK.AED
Ø1520x100x85	128	22400	D100.1520.LK.AED

KATOA
Everything is Lighting

Rua Dr. Manuel Ramos, 285 - Pavilhão E
4415-456 Grijó - Vila Nova de Gaia
Portugal

+351 221 110 602
ola@katoa.lighting
https://katoa.lighting/