MIRO DATASHEET

RECESSED APPLICATION

LED | 230V/50Hz | IP44



STANDARTS: EN 60598-1, EN 60598-2-1

83

TECHNICAL DRAWING

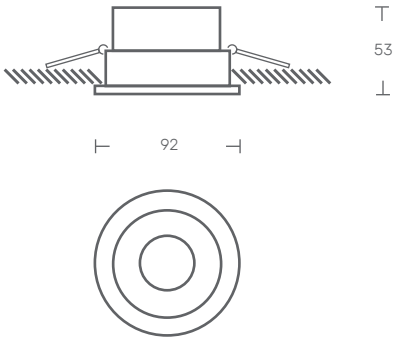

PRODUCT DESCRIPTION

LED luminaire for recessed application, with tab.
Aluminum body lacquered in epoxy polyester.
Adjustable luminaire.

LIGHT SOURCE

LED 8W
Driver LED, 20-240VAC - 50/60Hz.
CRI>90, PF>0.9, 50.000h of useful life.

AVAILABLE COLOR/FINISH

1-white/ 2-black/ 8-RAL

AVAILABLE LIGHT TEMPERATURE/ COLOR

2700K/ 3000K/ 4000K

AVAILABLE DIFFUSER

T - transparent

AVAILABLE DRIVER

1- HF - ON/OFF
2- DALI - Flow regulation
3- 1-10V - Flow regulation

MIRO

POWER (W)	FLOW(lm)	CODE
8	925	MIRO.008.LK.AET

Rua Dr. Manuel Ramos, 285 - Pavilhão E
4415-456 Grijó - Vila Nova de Gaia
Portugal

+351 221 110 602
ola@katoa.lighting
https://katoa.lighting/