SCUTT CUSTOM

DATASHEET

SUSPENDED/SURFACE APPLICATION

LED | 230V/50Hz | IP40

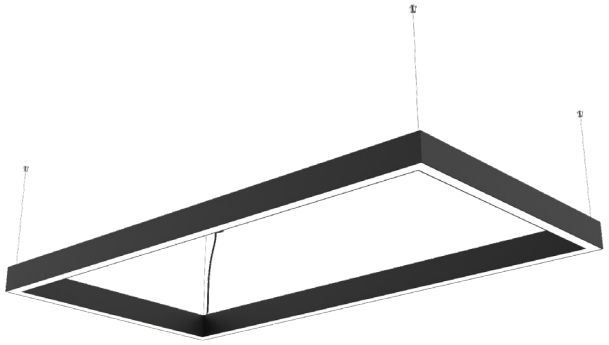

STANDARDS: EN 60598-1, EN 60598-2-1

PROFILES

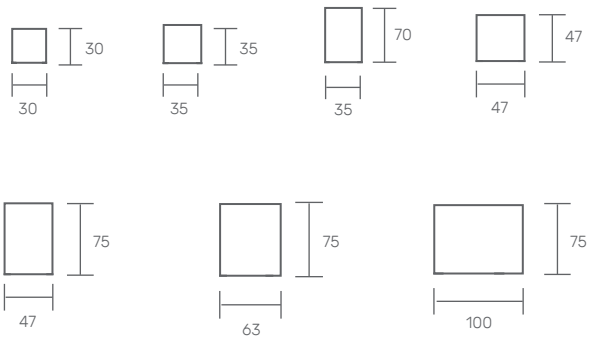

PRODUCT DESCRIPTION

Custom-made LED luminaire for suspended or surface-mounted application.
Lacquered aluminum body.
Opal silicone diffuser.

LIGHT SOURCE

Driver LED, 220-240V / 50-60Hz.
CRI>80, 100.000h of useful life.
@L90, B10, Ta 25°.

AVAILABLE COLOR/FINISH

1- white/ 2-black/ 4-anthracite/ 6-grey/
8- RAL

AVAILABLE LIGHT TEMPERATURE/ COLOR

TW

2700K/ 3000K/ 4000K/ 6500K/ TW

AVAILABLE DIFFUSER

O -opaline

AVAILABLE DRIVER

1- HF - ON/OFF
2- DALI - Flow regulation
3- 1-10V - Flow regulation

FORMAT EXAMPLES

Formats and measurements - On request

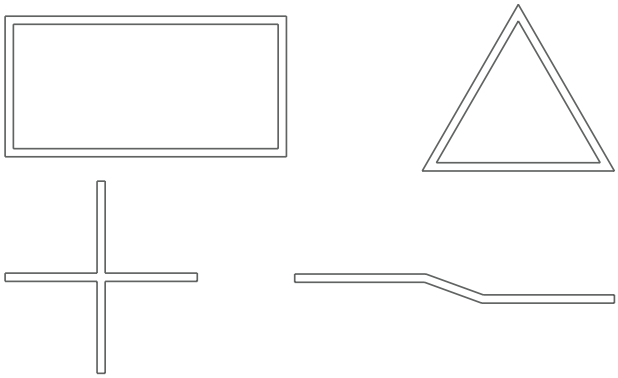

Everything is Lighting

Rua Dr. Manuel Ramos, 285 - Pavilhão E
4415-456 Grijó - Vila Nova de Gaia
Portugal

+351 221 110 602
ola@katoa.lighting
https://katoa.lighting/

SCUTT CUSTOM DATASHEET

SUSPENDED/SURFACE APPLICATION

LED | 230V/50Hz | IP40

STANDARDS: EN 60598-1, EN 60598-2-1

PRODUCT DESCRIPTION

SCUTT 47 luminaire with aluminum plates attached to the sides for customization.
Suspended or surface-mounted luminaire.
Lacquered aluminum body.
Opal silicone diffuser.

LUNO

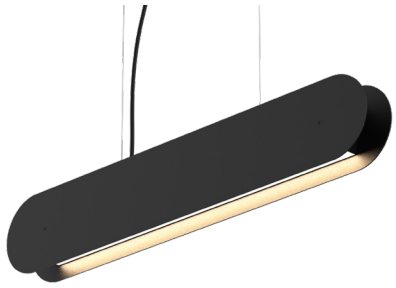

LUNO ID



TECHNICAL DRAWING

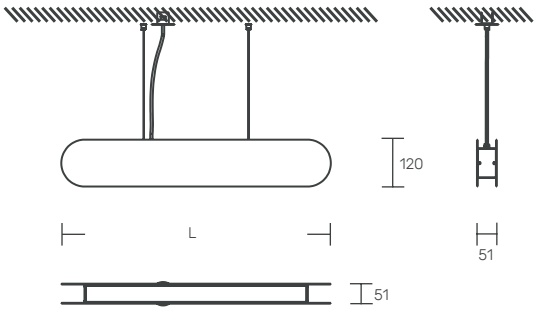

TECHNICAL DRAWING

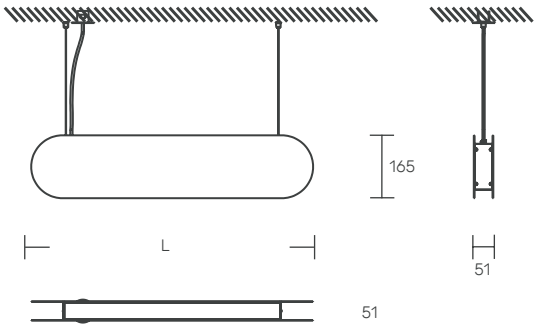

LUNO

DIMENSIONS Lx51x120 (mm)	POWER (W)	FLOW (lm)
694x51x120	16	2800
974x51x120	24	4200
1254x51x120	32	5600
1534x51x120	40	7000

LUNO ID

DIMENSIONS Lx51x165 (mm)	POWER (W)	FLOW (lm)
739x51x165	16x2	2800x2
1019x51x165	24x2	4200x2
1299x51x165	32x2	5600x2
1579x51x165	40x2	7000x2

Possibility of custom design - Upon request

KATOA
Everything is Lighting

Rua Dr. Manuel Ramos, 285 - Pavilhão E
4415-456 Grijó - Vila Nova de Gaia
Portugal

+351 221 110 602
ola@katoa.lighting
https://katoa.lighting/

SCUTT CUSTOM DATASHEET

SUSPENDED/SURFACE APPLICATION

LED | 230V/50Hz | IP40

STANDARDS: EN 60598-1, EN 60598-2-1

PRODUCT DESCRIPTION

SCUTT 30 luminaire with a bent aluminum plate bell, available for customization.
Suspended or surface-mounted luminaire.
Lacquered aluminum body.
Opal silicone diffuser.

FOLD



TECHNICAL DRAWING

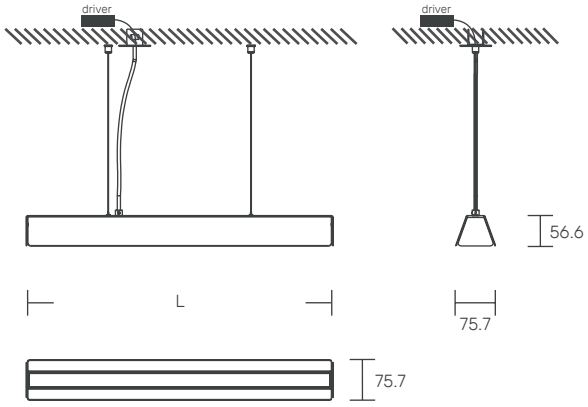

FOLD

DIMENSIONS Lx75.7x56,6 (mm)	POWER (W)	FLOW (lm)
721x75,7x56,6	20	3000
1001x75,7x56,6	28	4200
1281x75,7x56,6	36	5400
1561x75,7x56,6	44	6600

Possibility of custom design - Upon request

KATOA
Everything is Lighting

Rua Dr. Manuel Ramos, 285 - Pavilhão E
4415-456 Grijó - Vila Nova de Gaia
Portugal

+351 221 110 602
ola@katoa.lighting
https://katoa.lighting/

SCUTT CUSTOM DATASHEET

SUSPENDED/SURFACE APPLICATION

LED | 230V/50Hz | IP40

STANDARDS: EN 60598-1, EN 60598-2-1

PRODUCT DESCRIPTION

LED luminaire covered with an acoustic panel (100% wool burel), for suspended or surface-mounted installation.
Lacquered aluminum body.
Opal silicone diffuser.

ACOUSTIC



SCUTT CUSTOM - ACOUSTIC



LUNO - ACOUSTIC



FOLD - ACOUSTIC

AVAILABLE COLORS

more colors - on request



medium gray



gray



petroleum blue



eucalyptus



strong orange

KATOA
Everything is Lighting

Rua Dr. Manuel Ramos, 285 - Pavilhão E
4415-456 Grijó - Vila Nova de Gaia
Portugal

+351 221 110 602
ola@katoa.lighting
https://katoa.lighting/

SCUTT CUSTOM DATASHEET

SUSPENDED/SURFACE APPLICATION

LED | 230V/50Hz | IP40

STANDARDS: EN 60598-1, EN 60598-2-1

PRODUCT DESCRIPTION

Cork-coated LED light for suspended or surface-mounted installation.
Lacquered aluminum body.
Opal silicone diffuser.

CORK



SCUTT 30 - CORK

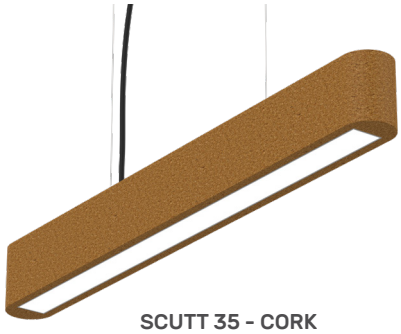

SCUTT 35 - CORK



SCUTT 47 SLIM - CORK

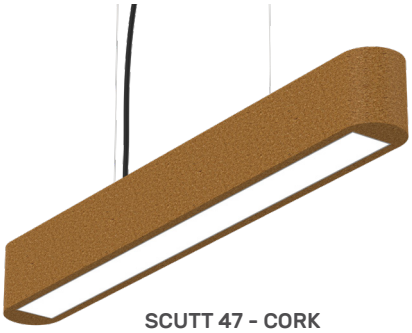

SCUTT 47 - CORK

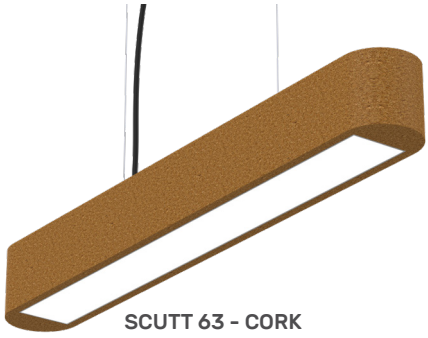

SCUTT 63 - CORK

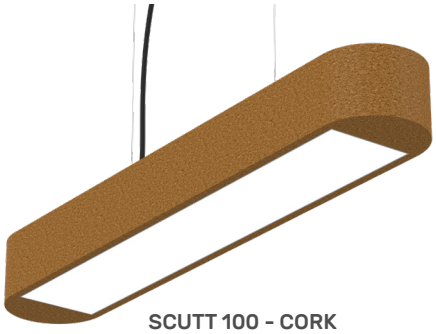

SCUTT 100 - CORK

TECHNICAL DRAWING

SCUTT PROFILE

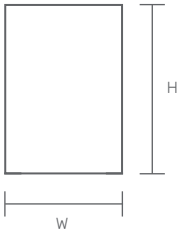

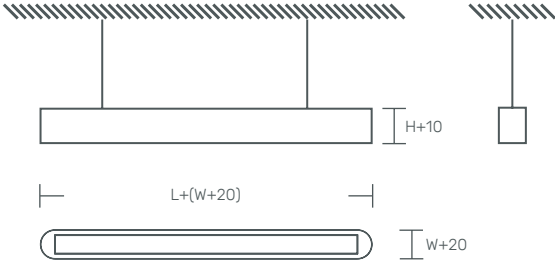

*dimensions available on request in the SCUTT technical sheet

KATOA
Everything is Lighting

Rua Dr. Manuel Ramos, 285 - Pavilhão E
4415-456 Grijó - Vila Nova de Gaia
Portugal

+351 221 110 602
ola@katoa.lighting
https://katoa.lighting/