EME E

DATASHEET

RECESSED APPLICATION

LED | 230V/50Hz | IP40 | IK04



STANDARDS: EN 60598-1, EN 60598-2-1, EN 60598-2-22

1-3h

273x52

TECHNICAL DRAWING

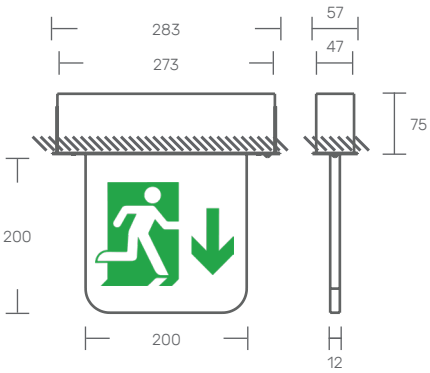

PRODUCT DESCRIPTION

LED emergency exit light with laser engraved pictogram in crystal clear acrylic. Body in extruded aluminum lacquered with epoxy polyester, for recessed application, with trim.
Permanent and non-permanent operating mode.
Built-in battery with autonomy of 1h or 3h in emergency mode.

LIGHT SOURCE

LED, 220-240VAC-50/60Hz.
CRI>80, L80, B10, Ta25°C, 65.000h of useful life.

AVAILABLE COLOR/FINISH

1-white/ 2-black/ 3-natural/ 4-anthracite

AVAILABLE LIGHT TEMPERATURE/COLOR

green

AVAILABLE DRIVER

1- HF - ON/OFF

EME E

POWER (W)	FLOW (lm)	CODE
4	670	EMEE.004.LG.AED

KATOA
Everything is Lighting

Rua Dr. Manuel Ramos, 285 - Pavilhão E
4415-456 Grijó - Vila Nova de Gaia
Portugal

+351 221 110 602
ola@katoa.lighting
https://katoa.lighting/