EVO

DATASHEET

SURFACE APPLICATION

LED | 230V/50Hz | IP40



STANDARDS: EN 60598-1, EN 60598-2-1

TECHNICAL DRAWING

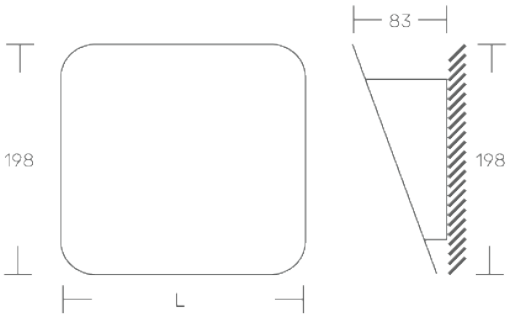

PRODUCT DESCRIPTION

LED luminaire with indirect lighting for surface application on the wall.
Opaline diffuser.

LIGHT SOURCE

Driver LED, 220-240VAC - 50/60Hz
CRI>80, FP>0.9, 100.000h of useful life.
@L80, B10, Ta 25°C

AVAILABLE COLOR/FINISH

1-white/ 2-black/ 4-anthracite/ RAL

AVAILABLE LIGHT TEMPERATURE/ COLOR

TW

2700K/ 3000K/ 4000K/ 6500K/ TW

AVAILABLE DIFFUSER

0 -opaline

AVAILABLE DRIVER

1- HF - ON/OFF
2- DALI - flow regulation

EVO

DIMENSIONS (mm)	POWER (W)	FLOW (lm)	CODE
L 210x198	8	1400	EVO.008.LK.AED
L 350x198	16	2800	EVO.016.LK.AED
L 630x198	32	5600	EVO.032.LK.AED

Possibility of custom dimensions - On request

KATOA
Everything is Lighting

Rua Dr. Manuel Ramos, 285 - Pavilhão E
4415-456 Grijó - Vila Nova de Gaia
Portugal

+351 221 110 602
ola@katoa.lighting
https://katoa.lighting/