EVO ID

DATASHEET

SURFACE APPLICATION

LED | 230V/50Hz | IP40



STANDARDS: EN 60598-1, EN 60598-2-1

TECHNICAL DRAWING

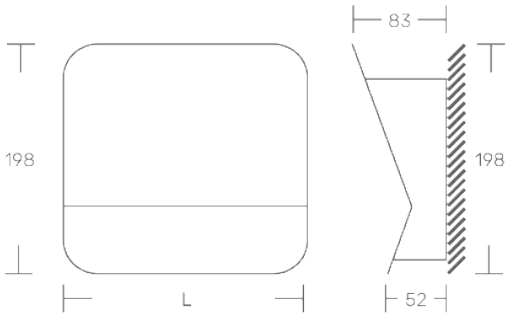

PRODUCT DESCRIPTION

LED luminaire with upper and lower indirect lighting, for surface mounting on the wall. Opaline diffuser.

LIGHT SOURCE

Driver LED, 220-240VAC - 50/60Hz
CRI>80, FP>0.9, 100.000h of useful life.
@L80, B10, Ta 25°C

AVAILABLE COLOR/FINISH

1-white/ 2-black/ 4-anthracite/ RAL

AVAILABLE LIGHT TEMPERATURE/ COLOR

TW

2700K/ 3000K/ 4000K/ 6500K/ TW

AVAILABLE DIFFUSER

O -opaline

AVAILABLE DRIVER

1- HF - ON/OFF
2- DALI - flow regulation

EVO ID

DIMENSIONS (mm)	POWER (W)	FLOW (lm)	CODE
L 210x198	8 + 4	1400+700	EVOID.012.LK.AED
L 350x198	16 + 8	2800+1400	EVOID.024.LK.AED
L 630x198	32 + 16	5600+2800	EVOID.048.LK.AED

Possibility of custom dimensions - On request

KATOA
Everything is Lighting

Rua Dr. Manuel Ramos, 285 - Pavilhão E
4415-456 Grijó - Vila Nova de Gaia
Portugal

+351 221 110 602
ola@katoa.lighting
https://katoa.lighting/