MINI POP SV

DATASHEET

SUSPENDED APPLICATION

LED | 24V | IP43



STANDARTS: EN 60598-1, EN 60598-2-1

360°

TECHNICAL DRAWING

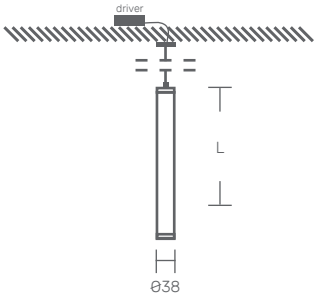

PRODUCT DESCRIPTION

360° LED tubular luminaire for suspended vertical application.
Body with 38mm in diameter in opal polycarbonate. Tops in lacquered aluminum.

LIGHT SOURCE

Driver LED, 24V.

AVAILABLE COLOR/FINISH

1-white/ 2-black/ 4-anthracite/ 5-brushed/ 6-grey

AVAILABLE LIGHT TEMPERATURE/COLOR

2700K/ 3000K/ 4000K/ 6500K

AVAILABLE DIFFUSER

0 -opaline

AVAILABLE DRIVER

1- HF - ON/OFF
2- DALI- Flow regulation

AVAILABLE APPLICATION



Surface (standard)
Ø56x20mm
code: FL.SAL.56



Recessed
Ø56mm
code:FL.ENC.56

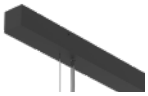

Surface-mount driver enclosure
403x36x40mm
code:FL.LIN.403.DR

MINI POP SV

DIMENSIONS (mm)	POWER (W)	FLOW (lm)	CODE
540	10	1150	MPOPSV.0540.LK.AED
540	30	3380	MPOP2SV.0540.LK.AED
1040	20	2300	MPOPSV.1040.LK.AED
1040	60	6760	MPOP2SV.1040.LK.AED
1540	30	3450	MPOPSV.1540.LK.AED
1540	90	10140	MPOP2SV.1540.LK.AED
2040	40	4600	MPOPSV.2040.LK.AED
2040	120	13520	MPOP2SV.2040.LK.AED

Possibility of custom lines - On request

KATOA
Everything is Lighting

Rua Dr. Manuel Ramos, 285 - Pavilhão E
4415-456 Grijó - Vila Nova de Gaia
Portugal

+351 221 110 602
ola@katoa.lighting
https://katoa.lighting/