BIC 90 A DATASHEET

RECESSED APPLICATION

LED | 230V/50Hz | IP20



STANDARTS: EN 60598-1, EN 60598-2-1

83

TECHNICAL DRAWING

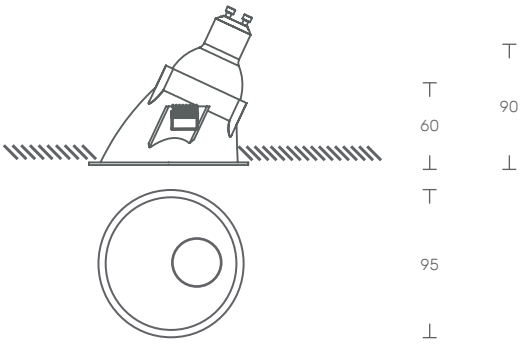

PRODUCT DESCRIPTION

Asymmetrical LED luminaire for recessed application, with trim.
Epoxy polyester lacquered aluminum body.

LIGHT SOURCE

GU10 Lamp
or
COB LED
Driver LED, 220-240VAC-50/60Hz.
CRI>90, 35.000h of useful life.

AVAILABLE COLOR/FINISH

1-white/ 2-black/ 4-anthracite/ 6-grey

AVAILABLE LIGHT TEMPERATURE/ COLOR

2700K/ 3000K/ 4000K

AVAILABLE DIFFUSER

X- without diffuser

AVAILABLE DRIVER

X- Without driver
1- HF - ON/OFF
2- DALI - Flow regulation

BIC 90 A - LED GU10

LED GU10	POWER (W)	FLOW (lm)	CODE
	6	600	BIC90A.006.LK.AED
	8	825	BIC90A.008.LK.AED
	-	-	BIC90A.000.LK.AED

BIC 90 A - COB LED

	9	1100	BIC90A.009.LK.AED
	12	1500	BIC90A.012.LK.AED

KATOA
Everything is Lighting

Rua Dr. Manuel Ramos, 285 - Pavilhão E
4415-456 Grijó - Vila Nova de Gaia
Portugal

+351 221 110 602
ola@katoa.lighting
https://katoa.lighting/