CUBE 2 XS

INSTRUÇÕES DE MONTAGEM
ASSEMBLY INSTRUCTIONS



1

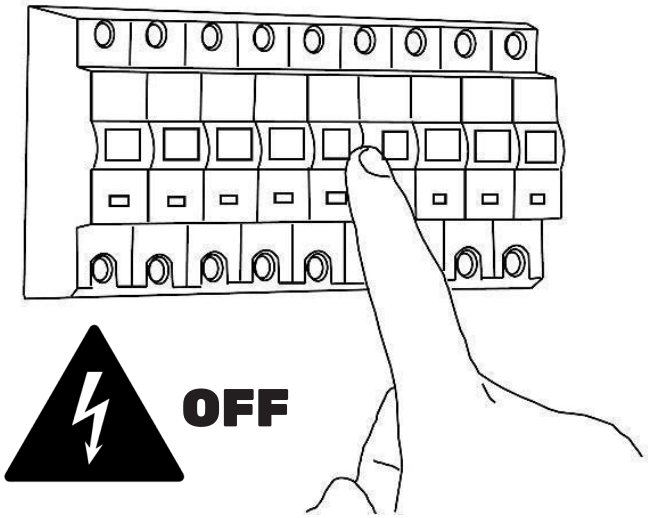

2

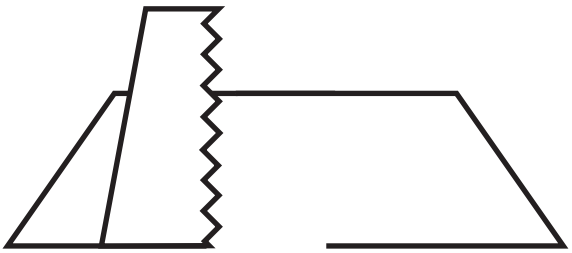

206 x 108 mm

KATOA Lighting Rua Dr. Manuel Ramos, 285, Pavillhão E
4415-456 Grijó, Vila Nova de Gaia
Portugal

www.katoa.lighting
ola@katoa.lighting
+351 221 110 602

3

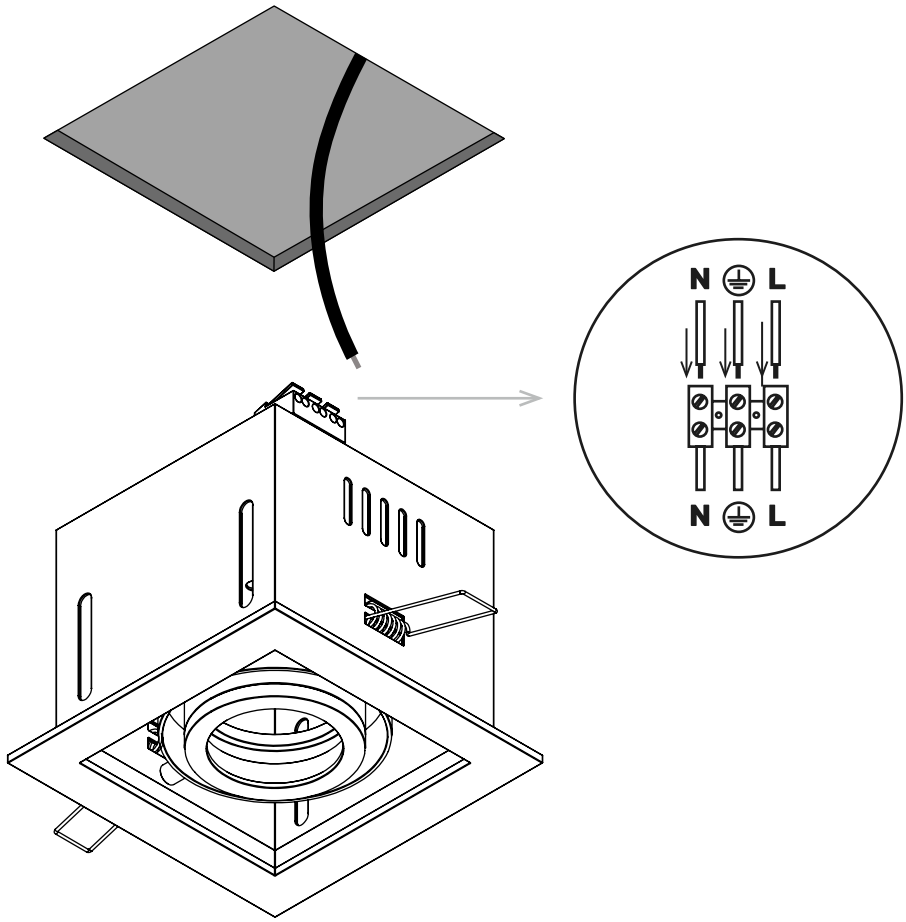

4

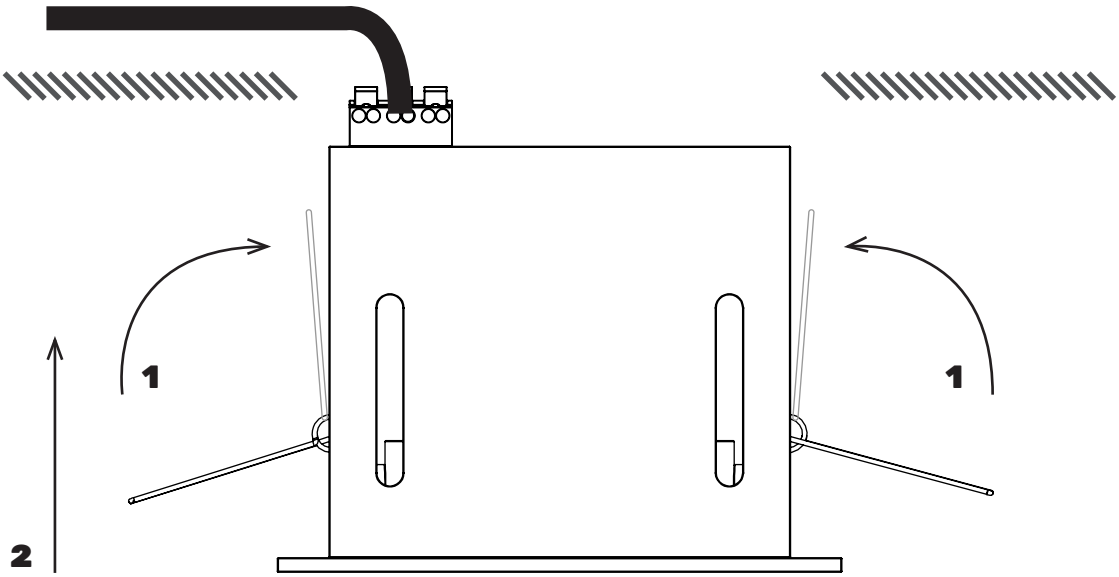

KATOA Lighting Rua Dr. Manuel Ramos, 285, Pavillhão E
4415-456 Grijó, Vila Nova de Gaia
Portugal

www.katoa.lighting
ola@katoa.lighting
+351 221 110 602