NERO IP

DATASHEET

SURFACE APPLICATION

LED | 230V/50Hz | IP44

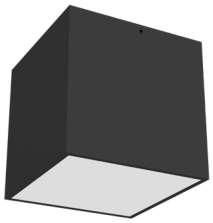

PRODUCT DESCRIPTION

LED luminaire for surface-mounted application.
Epoxy polyester lacquered aluminum body.

LIGHT SOURCE

GU10 Lamp

AVAILABLE COLOR/FINISH

1-white/ 2-black/ 4-anthracite/ 6-grey/ 8-RAL

AVAILABLE LIGHT TEMPERATURE/ COLOR

2700K/ 3000K/ 4000K

STANDARTS: EN 60598-1, EN 60598-2-1

TECHNICAL DRAWING

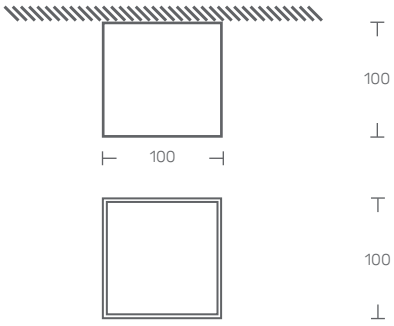

NERO IP

LED GU10	POWER (W)	FLOW (lm)	CODE
	6	600	NEROIP.006.LK.AED
	8	825	NEROIP.008.LK.AED
	-	-	NEROIP.000.LK.AED

KATOA
Everything is Lighting

Rua Dr. Manuel Ramos, 285 - Pavilhão E
4415-456 Grijó - Vila Nova de Gaia
Portugal

+351 221 110 602
ola@katoa.lighting
https://katoa.lighting/