TRIM 2 DATASHEET

RECESSED APPLICATION

LED | 230V/50Hz | IP20



STANDARTS: EN 60598-1, EN 60598-2-1



TECHNICAL DRAWING

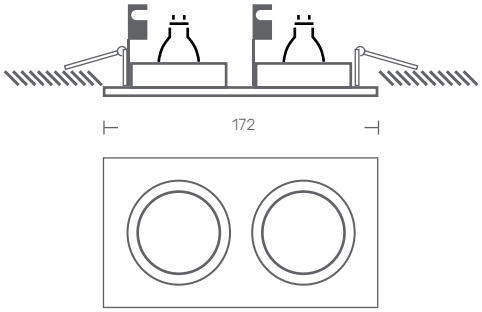

PRODUCT DESCRIPTION

Double LED luminaire, adjustable for recessed use, with trim.
Ring in brushed aluminum or epoxy polyester lacquered.

LIGHT SOURCE

GU10 Lamp
or
COB LED
Driver LED, 220-240VAC-50/60Hz.
CRI>90, 35.000h of useful life.

AVAILABLE COLOR/FINISH



1-white/ 2-black/ 4-anthracite/ 5-brushed/ 6-grey

AVAILABLE LIGHT TEMPERATURE/ COLOR



2700K/ 3000K/ 4000K

AVAILABLE DRIVER

X- Without driver
1- HF - ON/OFF
2- DALI - Flow regulation

TRIM 2 - LED GU10

LED GU10	POWER (W)	FLOW (lm)	CODE
	2x6	2x600	TRIM2.006.LK.AED
	2x8	2x825	TRIM2.008.LK.AED
	-	-	TRIM2.000.LK.AED

TRIM 2 - COB LED

2x9	2x1100	TRIM2.009.LK.AED
2x12	2x1500	TRIM2.012.LK.AED

KATOA
Everything is Lighting

Rua Dr. Manuel Ramos, 285 - Pavilhão E
4415-456 Grijó - Vila Nova de Gaia
Portugal

+351 221 110 602
ola@katoa.lighting
https://katoa.lighting/