REC DATASHEET

RECESSED APPLICATION

LED | 230V/50Hz | IP20



STANDARTS: EN 60598-1, EN 60598-2-1

74x72

PRODUCT DESCRIPTION

Adjustable LED luminaire for recessed use, with trim.
Body in galvanized sheet steel lacquered with epoxy polyester.

LIGHT SOURCE

COB LED or GU10 Lamp

AVAILABLE COLOR/FINISH

1-white/ 2-black/ 4-anthracite/ 6-grey

AVAILABLE LIGHT TEMPERATURE/ COLOR

2700K/ 3000K/ 4000K

TECHNICAL DRAWING

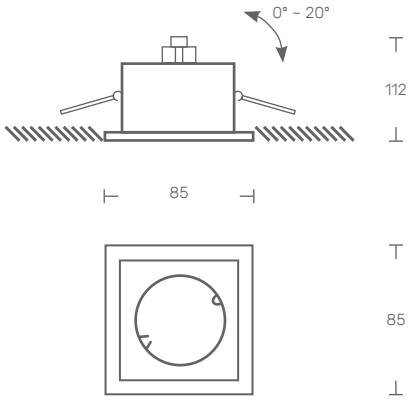

REC

LED GU10	POWER (W)	FLOW (lm)	CODE
	6	600	REC.006.LK.AED
	8	825	REC.008.LK.AED
	-	-	REC.000.LK.AED

REC - COB LED

9	1100	REC.009.LK.AED
12	1500	REC.012.LK.AED

KATOA
Everything is Lighting

Rua Dr. Manuel Ramos, 285 - Pavilhão E
4415-456 Grijó - Vila Nova de Gaia
Portugal

+351 221 110 602
ola@katoa.lighting
https://katoa.lighting/