PULL DATASHEET

RECESSED APPLICATION

LED | 12V | IP65



STANDARTS: EN 60598-1, EN 60598-2-1

30° 32

TECHNICAL DRAWING

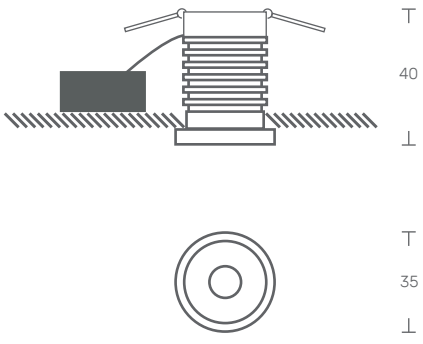

PRODUCT DESCRIPTION

LED luminaire for recessed application, with trim.
Lacquered aluminum body.
Light beam opening angle: 30°

LIGHT SOURCE

LED 3W
Driver LED, 12V.
CRI>80, 30.000h of useful life.

AVAILABLE COLOR/FINISH

1-white/ 2-black

AVAILABLE LIGHT TEMPERATURE/ COLOR

2700K/ 3000K/ 4000K

AVAILABLE DIFFUSER

T - transparent

AVAILABLE DRIVER*

1- HF - ON/OFF
*remote driver

PULL

POWER (W)	FLOW (lm)	CODE
3	200	PULL.003.LK.AED

KATOA
Everything is Lighting

Rua Dr. Manuel Ramos, 285 - Pavilhão E
4415-456 Grijó - Vila Nova de Gaia
Portugal

+351 221 110 602
ola@katoa.lighting
https://katoa.lighting/