LUPE DATASHEET

SUSPENDED APPLICATION

LED GU10 | 230V/50Hz | IP20



STANDARTS: EN 60598-1, EN 60598-2-1

PRODUCT DESCRIPTION

Luminaire for suspended application.
Aluminum body.

LIGHT SOURCE

GU10 lamp and COB LED support.

AVAILABLE COLOR/FINISH

1-white / 2-black
*chrome finish on request

AVAILABLE LIGHT TEMPERATURE/ COLOR

2700K/ 3000K/ 4000K

AVAILABLE DRIVER

1- HF - ON/OFF
2- DALI - Flow regulation

TECHNICAL DRAWING

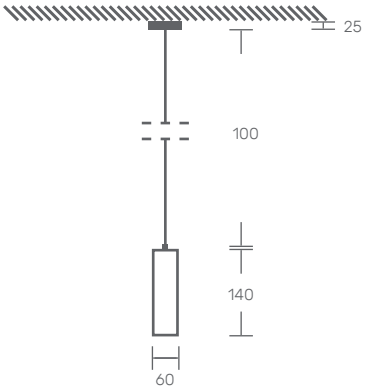

AVAILABLE CABLECUP



Surface (standard)
Ø70x25mm
code: FL.SAL.70



Recessed
Ø56mm
code:FL.ENC.56



Surface for driver COB LED
Ø60x120mm
code: FL.SAL.LUPE.60.DR

LUPE

LED GU10	POWER (W)	FLOW (lm)	CODE
	6	600	LUPE.006.LK.AED
	8	825	LUPE.008.LK.AED
	-	-	LUPE.000.LK.AED

LUPE - COB LED*

9	1100	LUPE.009.LK.AED
12	1500	LUPE.012.LK.AED

*cob led light with remote driver

KATOA
Everything is Lighting

Rua Dr. Manuel Ramos, 285 - Pavilhão E
4415-456 Grijó - Vila Nova de Gaia
Portugal

+351 221 110 602
ola@katoa.lighting
https://katoa.lighting/