GESS Q DATASHEET

RECESSED APPLICATION

LED | 230V/50Hz | IP20



STANDARDS: EN 60598-1, EN 60598-2-1

125x125

TECHNICAL DRAWING

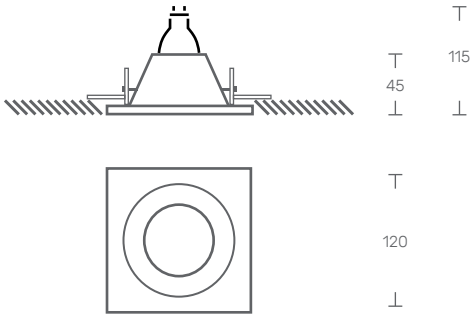

PRODUCT DESCRIPTION

LED luminaire for recessed application, without trim.
Plaster body.

LIGHT SOURCE

GU10 Lamp and COB LED

AVAILABLE COLOR/FINISH

1-white

AVAILABLE LIGHT TEMPERATURE/ COLOR

2700K/ 3000K/ 4000K

AVAILABLE DRIVER

X- Without driver
1- HF - ON/OFF
2- DALI - Flow regulation

GESS Q

LED GU10	POWER (W)	FLOW (lm)	CODE
	6	600	GESSQ.006.LK.AED
	8	825	GESSQ.008.LK.AED
	-	-	GESSQ.000.LK.AED
GESS - COB LED			
	9	1100	GESSQ.009.LK.AED
	12	1500	GESSQ.012.LK.AED

KATOA
Everything is Lighting

Rua Dr. Manuel Ramos, 285 - Pavilhão E
4415-456 Grijó - Vila Nova de Gaia
Portugal

+351 221 110 602
ola@katoa.lighting
https://katoa.lighting/