DOL DATASHEET

SURFACE APPLICATION

LED | 230V/50Hz | IP20



STANDARTS: EN 60598-1, EN 60598-2-1

TECHNICAL DRAWING

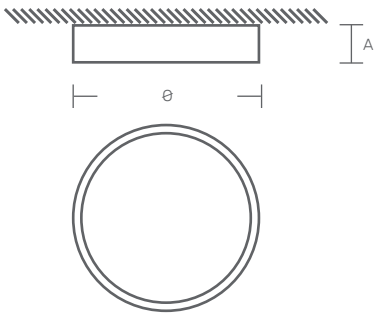

PRODUCT DESCRIPTION

Circular LED luminaire for surface-mounted application.
Extruded aluminum body coated with epoxy polyester.
Opal polycarbonate diffuser.

LIGHT SOURCE

Driver LED, 220-240VAC-50/60Hz.
CRI>80, 65.000h of useful life.
@L80, B10, Ta 25°.

AVAILABLE COLOR/FINISH

1-white/ 2-black/ 4-anthracite/ 6- grey/ 8-RAL

AVAILABLE LIGHT TEMPERATURE/ COLOR

TW

2700K/ 3000K/ 4000K/ 6500K/ TW

AVAILABLE DIFFUSER

O -opaline

AVAILABLE DRIVER

1- HF - ON/OFF
2- DALI - Flow regulation
4 - W- Bluetooth / Wifi

DOL

DIMENSIONS (mm)	POWER (W)	FLOW (lm)	CODE
Ø 220X80	15	2400	DOL22.015.LK.AED
Ø 320x80	15	2050	DOL32.015.LK.AED
Ø 320x80	29	4100	DOL32.029.LK.AED
Ø 420x80	17	2350	DOL42.017.LK.AED
Ø 420x80	34	4700	DOL42.034.LK.AED
Ø 620x80	41	7300	DOL62.041.LK.AED
Ø 620x80	85	14000	DOL62.085.LK.AED
Ø 905x125	104	19500	DOL90.104.LK.AED
Ø 905x125	143	27500	DOL90.143.LK.AED
Ø 1205x125	110	22000	DOL12.110.LK.AED
Ø 1205x125	190	37500	DOL12.190.LK.AED

KATOA
Everything is Lighting

Rua Dr. Manuel Ramos, 285 - Pavilhão E
4415-456 Grijó - Vila Nova de Gaia
Portugal

+351 221 110 602
ola@katoa.lighting
https://katoa.lighting/