DECO DATASHEET

SUSPENDED APPLICATION

LED | E27 | 230V/50Hz | IP20



STANDARTS: EN 60598-1, EN 60598-2-1

Possibility of surface or recessed cablecup.

TECHNICAL DRAWING

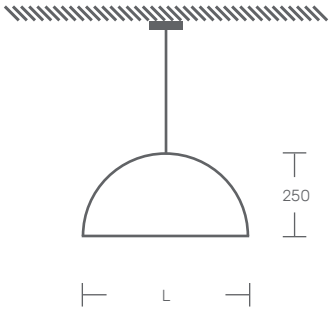

PRODUCT DESCRIPTION

Circular LED/E27 luminaire for suspended application.
Epoxy polyester coated aluminum body.

LIGHT SOURCE

E27 or Driver LED, 220-240VAC-50/60Hz
CRI>80, 80.000h of useful life.
@L90, B10, Ta 25°C.

AVAILABLE COLOR/FINISH

1-white/ 2-black/ 4-anthracite/ 6-grey/ 7-gold/ 8-RAL

*white interior (standard) - other color on request

AVAILABLE LIGHT TEMPERATURE/ COLOR

2700K/ 3000K/ 4000K/ TW

AVAILABLE DIFFUSER

X -without diffuser / O -opaline

AVAILABLE DRIVER

X- Without driver
1- HF - ON/OFF
2- DALI - Flow regulation
3- 1-10V - Flow regulation
4- W - Bluetooth / Wifi

AVAILABLE APPLICATION



Surface
Ø86x20mm
code: FL.SAL.86



Recessed
Ø86mm
code: FL.ENC.86

DECO - E27

LED E27	DIMENSIONS (mm)	POWER (W)	FLOW (lm)	CODE
●	Ø300x250	7	725	DECO30.007.LK.AED
○	Ø300x250	-	-	DECO30.000.LK.AED
●	Ø400x250	7	725	DECO40.007.LK.AED
○	Ø400x250	-	-	DECO40.000.LK.AED
●	Ø500x250	7	725	DECO50.007.LK.AED
○	Ø500x250	-	-	DECO50.000.LK.AED

DECO - LED

DIMENSIONS (mm)	POWER (W)	FLOW (lm)	CODE
Ø300x250	15	2400	DECO30.015.LK.AED
Ø400x250	15	2050	DECO40.015.LK.AED
Ø400x250	29	4100	DECO40.029.LK.AED
Ø500x250	17	2350	DECO50.017.LK.AED
Ø500x250	34	4700	DECO50.034.LK.AED

KATOA
Everything is Lighting

Rua Dr. Manuel Ramos, 285 - Pavilhão E
4415-456 Grijó - Vila Nova de Gaia
Portugal

+351 221 110 602
ola@katoa.lighting
https://katoa.lighting/