BOX DATASHEET

SURFACE APPLICATION

LED | 230V/50Hz | IP40

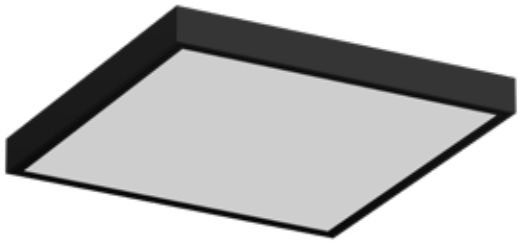

STANDARDS: EN 60598-1, EN 60598-2-1

TECHNICAL DRAWING

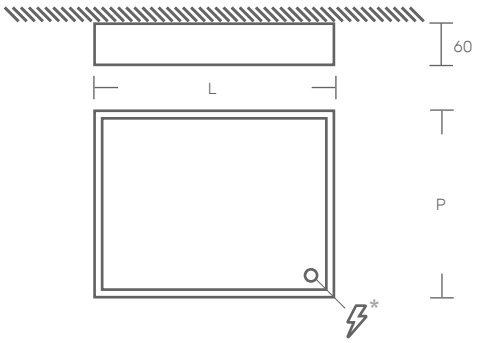

* electrical power input

PRODUCT DESCRIPTION

LED luminaire for surface-mounted application.
Lacquered steel body.
Opal polycarbonate diffuser.

LIGHT SOURCE

Driver LED, 220-240VAC-50/60Hz.
CRI>80, 65.000h of useful life.
@L80, B10, Ta 25°.

AVAILABLE COLOR/FINISH

1-white/ 2-black/ 4-anthracite/ 6- grey/ 8-RAL

AVAILABLE LIGHT TEMPERATURE/ COLOR

TW

2700K/ 3000K/ 4000K/ 6500K/ TW

AVAILABLE DIFFUSER

UGR <19

O -opaline/ P -microprismatic

AVAILABLE DRIVER

1- HF - ON/OFF
2- DALI - Flow regulation
3- 1-10V -Flow regulation
4- W - Bluetooth / Wifi

BOX

DIMENSIONS (mm)	POWER (W)	FLUXO (lm)	CODE
297x1197	28	4900	BOX30.028.LK.AED
297x1197	42	7200	BOX30.042.LK.AED
297x1497	43	6125	BOX30.043.LK.AED
297x1497	87	9000	BOX30.087.LK.AED
597x597	28	4900	BOX60.028.LK.AED
597x597	42	7200	BOX60.042.LK.AED

KATOA
Everything is Lighting

Rua Dr. Manuel Ramos, 285 - Pavilhão E
4415-456 Grijó - Vila Nova de Gaia
Portugal

+351 221 110 602
ola@katoa.lighting
https://katoa.lighting/