BOOK DATASHEET

SURFACE APPLICATION

LED | 230V/50Hz | IP20



STANDARTS: EN 60598-1, EN 60598-2-1

30°

TECHNICAL DRAWING

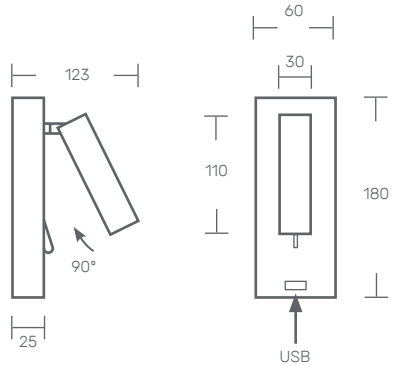

PRODUCT DESCRIPTION

LED luminaire for surface mounting on the wall.
Stainless steel body lacquered with epoxy polyester.

LIGHT SOURCE

Driver LED, 220-240VAC - 50/60Hz
30.000h of useful life.

AVAILABLE COLOR/FINISH

1-white/ 2-black

AVAILABLE LIGHT TEMPERATURE/ COLOR

2700K

AVAILABLE DIFFUSER

T - transparente

AVAILABLE DRIVER

1- HF - ON/OFF

BOOK

POWER (W)	FLOW (lm)	CODE
4	200	BOOK.004.LK.AED

KATOA
Everything is Lighting

Rua Dr. Manuel Ramos, 285 - Pavilhão E
4415-456 Grijó - Vila Nova de Gaia
Portugal

+351 221 110 602
ola@katoa.lighting
https://katoa.lighting/