BIL 90 DATASHEET

RECESSED APPLICATION

LED | 230V/50Hz | IP20



STANDARTS: EN 60598-1, EN 60598-2-1

80° 85

TECHNICAL DRAWING

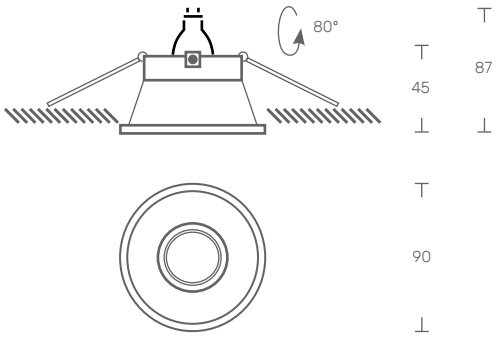

PRODUCT DESCRIPTION

Adjustable LED luminaire for recessed use, with trim.
Epoxy polyester lacquered aluminum body.

LIGHT SOURCE

GU10 Lamp
or
COB LED
Driver LED, 220-240VAC-50/60Hz.
CRI>90, 35.000h of useful life.

AVAILABLE COLOR/FINISH

1-white/ 2-black/ 4-anthracite/ 6-grey

AVAILABLE LIGHT TEMPERATURE/ COLOR

2700K/ 3000K/ 4000K

AVAILABLE DRIVER

X- Without driver
1- HF - ON/OFF
2- DALI - Flow regulation

BIL 90 - LED GU10

LED GU10	POWER (W)	FLOW (lm)	CODE
	6	600	BIL90.006.LK.AED
	8	825	BIL90.008.LK.AED
	-	-	BIL90.000.LK.AED

BIL 90 - COB LED

	9	1100	BIL90.009.LK.AED
	12	1500	BIL90.012.LK.AED

KATOA Everything is Lighting

Rua Dr. Manuel Ramos, 285 - Pavilhão E
4415-456 Grijó - Vila Nova de Gaia
Portugal

+351 221 110 602
ola@katoa.lighting
https://katoa.lighting/