BIC 90 IP DATASHEET

RECESSED APPLICATION

LED | 230V/50Hz | IP54



STANDARTS: EN 60598-1, EN 60598-2-1

80

TECHNICAL DRAWING

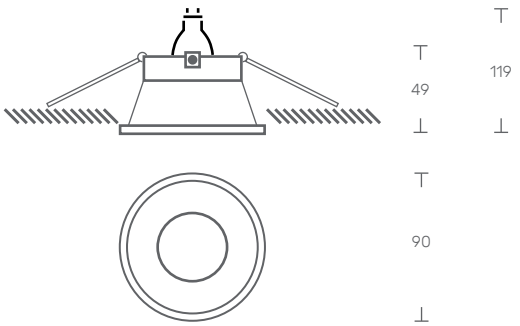

PRODUCT DESCRIPTION

LED luminaire for recessed application, with flap.
Epoxy polyester lacquered aluminum body.

LIGHT SOURCE

GU10 Lamp
or
COB LED
Driver LED, 220-240VAC-50/60Hz.
CRI>90, 35.000h of useful life.

AVAILABLE COLOR/FINISH

1-white/ 2-black/ 4-anthracite/ 6-grey

AVAILABLE LIGHT TEMPERATURE/ COLOR

2700K/ 3000K/ 4000K

AVAILABLE DIFFUSER

O -opaline / T -transparent

AVAILABLE DRIVER

X- Without driver
1- HF - ON/OFF
2- DALI - Flow regulation

BIC 90 IP - LED GU10

LED GU10	POWER (W)	FLOW (lm)	CODE
	6	600	BIC90IP.006.LK.AED
	8	825	BIC90IP.008.LK.AED
	-	-	BIC90IP.000.LK.AED

BIC 90 IP - COB LED

9	1100	BIC90IP.009.LK.AED
12	1500	BIC90IP.012.LK.AED

KATOA
Everything is Lighting

Rua Dr. Manuel Ramos, 285 - Pavilhão E
4415-456 Grijó - Vila Nova de Gaia
Portugal

+351 221 110 602
ola@katoa.lighting
https://katoa.lighting/